Your authorized AUBO channel partner:

2026_Rev1_EN

AUBO Robotics USA

Headquarters Address: 11701 Metro Airport Center Drive, Suite 110 Romulus, MI 48174

Tel: +1 833-282-6276

E-mail: sales@aubo-usa.com

AUBO Robotics USA

PRODUCT CATALOG

Automation Without Bounds

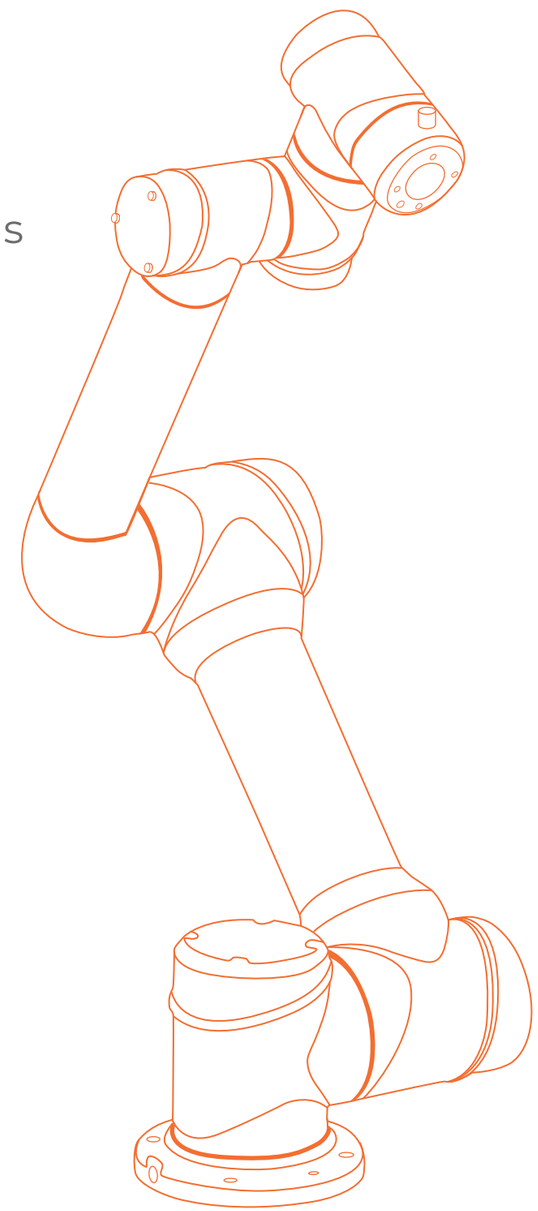

aubo-usa.com

www.aubo-usa.com

BUILDING A MORE COLLABORATIVE FUTURE ONE COBOT AT A TIME

TABLE OF CONTENTS

01 About AUBO

Corporate Profile P01
History & Milestones P03
Quality & Safety Certifications P05

02 Our Products

Overview & Advantages P07
i-Series Cobots P09
iS-Series Cobots P11

03 Applications & Proof

Real-World Applications P13
Success Stories P15

04 Ecosystem & Support

Ecosystem & Partners P19
Operations & Support P21

05 Technical Reference

Technical Specifications P23
Dimensional Drawings P27

Discover the value of Reliability

Built for the future of human progress.

WHO IS AUBO?

Building a more collaborative world

AUBO Robotics creates open architecture, precision-calibrated, simple-to-operate collaborative robots. In 2010 AUBO Robotics started developing their first robot at the University of Tennessee – originally in pursuit of creating a robot that served well for the classroom and education setting. In time, the team began researching and developing industrial applications, quickly cementing itself as a global leader in cobot production and APAC's leading industrial collaborative robot manufacturer.

Based in Detroit, Michigan, AUBO Robotics USA exclusively serves the North American Market. Our US Headquarters includes our warehouse, service department, training center, and technical, customer, and sales support teams. Dedicated to the US market, we are motivated by results and driven by the success of our customers, helping you build custom automation solutions to accelerate growth and build ROI.

We believe that with the right approach, automation will change the course of human progress for the better – replacing occupations prone to safety hazards and pushing manufacturers to develop their labor's human capital. As such, we set out to create automation solutions that work alongside humans and are accessible to any business while bringing value and customization back to your production workflow.

MILESTONES

2010
COMMENCEMENT OF R&D

The team established a dedicated, independent research center and began development toward the i-Series cobots.

The AUBO team launched research and development of collaborative robots for education at the University of Tennessee.**

2012
THE FIRST AUBO R&D CENTER IS ESTABLISHED

2015
GOING GLOBAL

Academician Ni Guangnan was appointed as chief scientific advisor.

Launched next-gen cobots including AUBO-i3/i7/i10.

The product line achieved tri-market compliance (CE/UL/KCs).

2016
MASS PRODUCTION START

The AUBO-i5 collaborative robot entered mass production, with assembly, testing, and shipment beginning at the Changzhou production facility to support growing global demand.

2017
UL CERTIFICATION & GLOBAL EXPANSION

A team of globally respected scientists and engineers joined AUBO to strengthen engineering and test standards.

All cobots achieved official UL certification, and the next-gen AUBO i3/i7/i10 line launched with tri-market compliance (CE/UL/KCs).

2018
ALL COBOTS PASS EN ISO 13849-1:2015 (PL=D, CAT 3) SECURITY CERTIFICATION

AUBO became the first cobot manufacturer in China to achieve this internationally recognized safety certification, reinforcing its commitment to industrial-grade safety standards.

2020
EXPANDED TESTING AND QA PROCESS

With all models UL certified by late 2017, AUBO invested heavily in testing and quality assurance, expanding its main production center to include a full-scale testing hall.

2021
SALES MILESTONE: OVER 10,000 UNITS SOLD

Zibo factory commenced operations.

Achieved SEMI S2 & cleanroom class 5 certification cluster.

Founded the Cobot Journal, the first SCI-indexed periodical dedicated to cobot research.

2023
AUBO EXPANDS U.S. OPERATIONS

AUBO opens its US Headquarters in Romulus, Michigan.

AUBO USA offers a range of benefits, including local parts and cobot arm storage, on-site training services, and local support resources, among others.

2024
SALES MILESTONE: OVER 30,000 UNITS SOLD

Launch of the AUBO-iS35 cobot and AUBO screwdriving robot.

Sales milestone: over 30,000 units sold.

Launched a global Robot Trade-in Program.

2025
12,000 UNITS ANNUAL DELIVERY VOLUME

First Prize, Machinery Industry Science and Technology Award

Beijing Quality Management Nomination Award

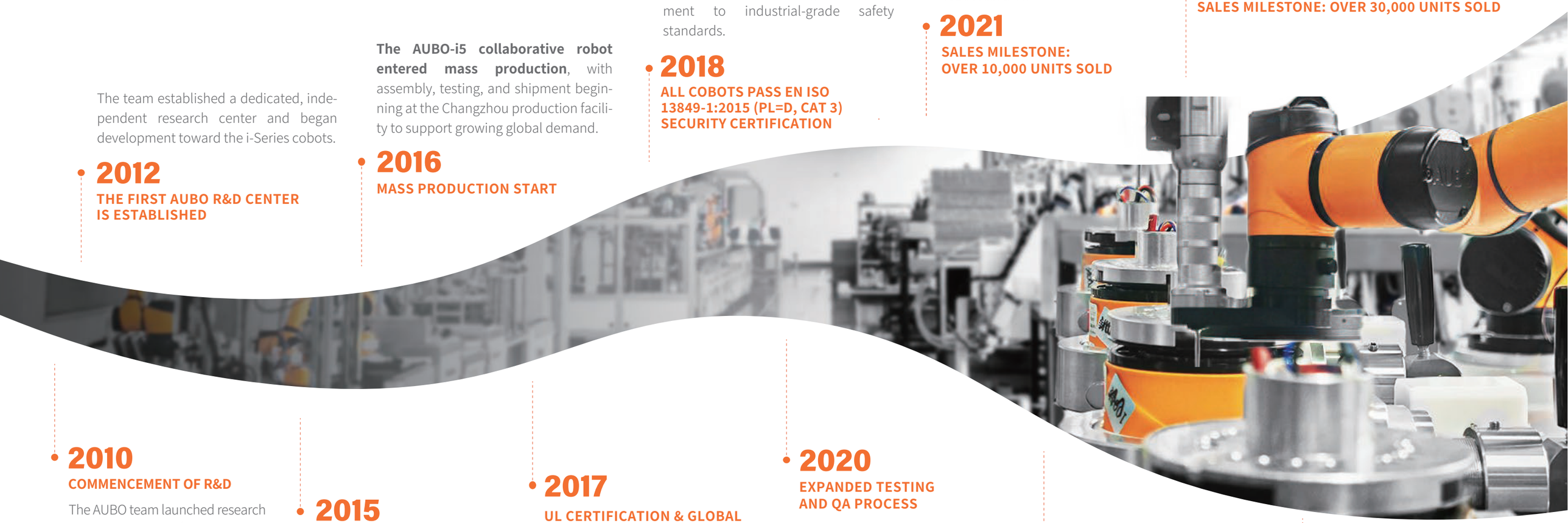

**The use of the University of Tennessee, Knoxville name does not constitute the endorsement, sponsorship, or support of AUBO Robotics and its subsidiaries by the University of Tennessee or any of its affiliated organizations. AUBO Robotics USA, Inc. does not claim any affiliation with the University of Tennessee or any of its affiliated organizations.

METICULOUSLY DESIGNED, **RIGOROUSLY TESTED**

We push our cobots to the limit – so you can too. Our protocol consisting of over 160 tests, includes, high temperature, part wear, fatigue, repeatability, operating noise, laser calibration, precision, and more – we ensure the reliability, quality, and durability of our products are at their pinnacle before a single cobot leaves our production floor.

Production Capacity

AUBO's production base, located in Changzhou City, covers an area of 12,000㎡, and has an annual production capacity of 10,000 units. Our vertically integrated manufacturing process and ownership of the supporting systems within our supply chain allow us to control even the slightest inconsistencies to ensure the pinnacle of durability, lifespan, and design. As a result of this manufacturing process, AUBO's supply chain was largely una ected during the global supply chain crisis. Contrarily, AUBO grew its market share and o ered customers a reliable supply.

Assembly & Quality Control

27 IQC Tests · **163** Test Standards · **76** Test Instruments

Component QA

354 Test Standards · **126** Test Instruments

Final QA

58 QA Tests · **21** Test Instruments

PRODUCT **SAFETY CERTIFICATIONS**

AUBO Robotics is dedicated to providing customers with safe and reliable collaborative robots. Our products have achieved comprehensive global certifications, including **EN ISO 13849-1:2023 (PL=d, CAT 3), EN ISO 10218-1: 2011, EN IEC 61000-6: 2019 IS/TS 15066: 2016, and ISO Class 5 Cleanroom** standards. These certifications guarantee safety and reliability throughout the product's entire lifecycle.

Safety Certifications

SGS

COMPLIANCE

VERIFICATION OF COMPLIANCE

Verification No.: SHEM250600412001MDC
Applicant: AUBO (Beijing)Robotics Technology Co., Ltd.
Address of Applicant: 18F, Block C, Zhizhen Building, No. 7 Zhichun Road, Haidian District, Beijing, China
Manufacturer: AUBO (Jiangsu) Robotics Co., Ltd.
Address of Manufacturer: Block A, Mingseal Technology Building, No. 18 Changwu Middle Road, Wujin District, Changzhou City, Jiangsu Province, China
Product Description: AUBO COLLABORATIVE ROBOTS, AUBO ROBOTS
Model No.: AUBO-iS7, AUBO-iS10, AUBO-iS20, AUBO-iS20L, AUBO-iS25
Test Standards: EN IEC 61000-6-4: 2019; EN IEC 61000-6-2: 2019
Test Report Number(s): SHEM250600412001

This Verification of EMC Compliance has been granted to the applicant based on the results of the tests, performed by laboratory of SGS-CSTC Standards Technical Services Co., Ltd. on the sample of the above-mentioned product in accordance with the provisions of the relevant specific standards under Directive 2014/30/EU. The CE mark can be used, under the responsibility of the manufacturer, after completion of an EU Declaration of Conformity and compliance with all relevant EU Directives.

Parlam Zhan
Laboratory Manager
SGS-CSTC Standards Technical Services Co., Ltd

EMC-VOC-F01/ Rev.2.0/ 2024-03-25
Page 1 of 1

EN IEC 61000-6: 2019

SGS

VERIFICATION OF MD COMPLIANCE

No.: MD SHES2309016929MDA02
Applicant: AUBO (Beijing) Robotics Technology Co., Ltd. 18F, Block C, Zhizhen Building, No. 7 Zhichun Road, Haidian District, Beijing, China
Manufacturer: AUBO (Jiangsu) Robotics Co., Ltd. Mingseal Technology Building, 530 Avenue, Science and Education City, Wujin District, Changzhou City, Jiangsu Province, China
Product Description: AUBO ROBOTS
Model No.: AUBO-iS20, AUBO-iS20L, AUBO-iS25
Additional Information (if any): VOC MD SHES2309016929MDA01 dated on 2024-02-02 is no longer valid since this VOC MD SHES2309016929MDA02 dated on 2025-10-22 issued.

Sufficient samples of the product have been tested and found to be in conformity with requirements of following standard(s) and applicable parts of the Annex I of the Machinery Directive (2006/42/EC)
Test Standard: EN 60204-1:2018; EN ISO 10218-1:2011; EN ISO 12100:2010; ISO 13849-1:2015
as shown in the Test Report Number(s): SHES230901692902-01/02/03; SHFS230700028472; SHFS250600030571

This Verification of MD Compliance has been granted to the applicant based on the results of tests, performed by Laboratory of SGS-CSTC Standards Technical Services Co., Ltd. on sample of the above-mentioned product in accordance with the provisions of the relevant harmonized standards under the Machinery Directive 2006/42/EC. The CE mark can be affixed, under the responsibility of the manufacturer, after completion of an EC Declaration of Conformity and compliance with all relevant EC Directives. The affixing of the CE marking presumes in addition that the conditions in the Directives are fulfilled.

Andrew Zhai
Technical Manager
SGS-CSTC Standards Technical Services Co., Ltd.
2025-10-22

EN ISO 10218-1: 2011

CERTIFICATE

SGS

Functional Safety
Certificate No. FS/SHFS2506000305MD

Certificate Holder: AUBO (Beijing) Robotics Technology Co., Ltd. 18F, Block C, Zhizhen Building, No. 7 Zhichun Road, Haidian District, Beijing, China
Manufacturer: AUBO (Jiangsu) Robotics Co., Ltd. Block A, Mingseal Technology Building, No. 18 Changwu Middle Road, Wujin District, Changzhou City, Jiangsu Province, China
Trademarks:
Certified Product: AUBO ROBOTS
Model (s) No. / Series: AUBO-iS20L, AUBO-iS25
Assessment Performed: ISO 13849-1:2023, ISO 13849-2:2012
Conclusion: The safety architecture and performance level meet PL d with Cat. 3 according to ISO 13849-1:2023, detail information of safety function items is shown in APPENDIX I.

As shown in the technical report number(s): SHFS250600030571

This certificate confirms the achievement of the requirements of functional safety based on proof of the safety-related parameters (failure rate, MTTFD / PFH, safety architecture etc), proofs that processes, and methods are established at the manufacturer guaranteeing that unexceptionable processes in terms of risk analysis, design, production, validation, modification and quality management comply with the standard.

Authorized by: Andrew Zhai, Technical Manager
Issue Date: 15/08/2025
Expiry Date: 15/08/2030

EN ISO 13849-1: 2023

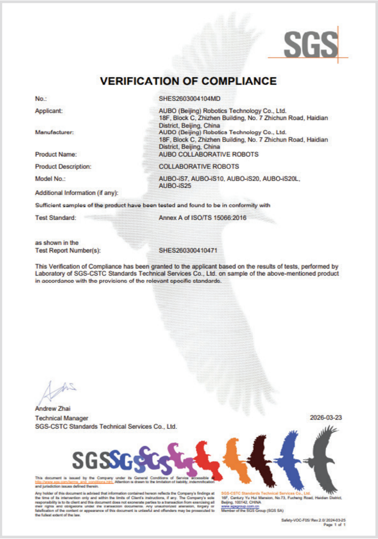
SGS

VERIFICATION OF COMPLIANCE

No.: SHES2603004104MD
Applicant: AUBO (Beijing) Robotics Technology Co., Ltd. 18F, Block C, Zhizhen Building, No. 7 Zhichun Road, Haidian District, Beijing, China
Manufacturer: AUBO (Beijing) Robotics Technology Co., Ltd. 18F, Block C, Zhizhen Building, No. 7 Zhichun Road, Haidian District, Beijing, China
Product Name: AUBO COLLABORATIVE ROBOTS
Product Description: COLLABORATIVE ROBOTS
Model No.: AUBO-iS7, AUBO-iS10, AUBO-iS20, AUBO-iS20L, AUBO-iS25
Additional Information (if any):
Sufficient samples of the product have been tested and found to be in conformity with
Test Standard: Annex A of ISO/TS 15066:2016
as shown in the Test Report Number(s): SHES260300410471

This Verification of Compliance has been granted to the applicant based on the results of tests, performed by Laboratory of SGS-CSTC Standards Technical Services Co., Ltd. on sample of the above-mentioned product in accordance with the provisions of the relevant specific standards.

Andrew Zhai
Technical Manager
SGS-CSTC Standards Technical Services Co., Ltd.
2026-03-23

ISO/TS 15066: 2016

SGS

CERTIFICATE OF COMPLIANCE

Certificate Number: SGSNA/26/SH/00330X
Contract Number: 803605
Certificate Project Number: SH-CERT200503764
Certified Product: Collaborative Robot
Trademarks:
Model(s): Manipulator: AUBO-iS7, AUBO-iS10, AUBO-iS20, AUBO-iS20L, AUBO-iS25; Controller: AUBO-CB-iS; Teach pendant: AUBO-TP-iS
Technical Data: 115/230V~, 50/60Hz
Certificate Holder: AUBO (Beijing) Robotics Technology Co., Ltd. 18F, Block C, Zhizhen Building, No. 7 Zhichun Road, Haidian District, Beijing, China

UL 1740, 4th Edition, Rev. August 12, 2025
CAN/CSA Z434-14 (R2024)
ANSI/RIA R15.06-2012
NFPA 79-2024, Dated December 21, 2023
Certification Condition
End user should provide suitable power supply to robot.
Robot should be established in safety fence if collaborative function is not engaged.

Authorized by: Mark Lohmann, Certifier
Effective date: 08 June 2026

Page 1 of 1

SGSNA/26/SH/00330X

BUILT FOR **COLLABORATION**

Our flagship cobots combine ease of use, precision, and trusted safety. AUBO developed the i-series and iS-series with exceptional quality and craftsmanship, designed to be simple to use out of the box while retaining full programming customization, which gives your team the flexibility to adapt automation to your workflow.

Our turnkey solutions bridge the gap to automation, offering a seamless, supportive first step that removes uncertainty and empowers your business to thrive. With AUBO, you can improve your factory's efficiency, productivity, and long-term profitability with confidence.

THE AUBO **ADVANTAGE**

Flexible Deployment

- AUBO cobots are lightweight and compact, featuring a minimal footprint for easy deployment across applications – within four hours on average.
- With 6-degrees of freedom, each cobot is designed to retain flexibility regardless of the work space.

Never Proprietary

- AUBO cobots feature ISO 9409-1-50 mechanical interfaces, allowing easy integration with all standard end-of-arm tooling.
- Our cobots do not require a specific ecosystem of products or software and feature fully open source architecture.

Easy to Program & Operate

- Out-of-the box, it takes less than 30 minutes for an untrained user to learn how to program their first simple task.
- Our teach pendant features a simple to use visual drag and drop system for cobot operation, so you can realize the full benefits of automation without coding experience.

Application Agnostic

- i-Series Cobots are built to integrate fully and easily into your existing application workflow. Regardless of the use case or industry, we can help customize a solution for you.

Safety Features

- The i-Series cobots are certified EN ISO 13849-1:2015 (PL=d, CAT 3), ISO/TS 15066:2016 (excluding i20**) UL, CE, and SEMI S2 compliant.
- 10-levels of customizable collision detection and sensory safety.
- In the case of power loss: every joint activates a braking system to lock it's position, even when holding objects.
- The 16 safety I/O interfaces feature redundant design and ensure the continued operation of safety features in the case of a single port failure.

Open Source Architecture

- AUBO Cobots are open source and allow full customization by end-users.
- We provide SDKs in C, C++, C#, Lua, and Python for 32 & 64-bit Linux and Windows, and support for ROS.
- Communcation protocols include: Ethernet TCP/IP, ModBus-RTU/TCP, and Profinet.
- Support for custom plugin development.
- Public access to AUBO's Virtual Machine for sandbox development and testing environment.

Modular Design

- Every joint in an AUBO Cobot is designed to be fully modular, so in the rare case that a cobot needs servicing any joint can be swapped out quickly and easily.
- The modularity effectively reduces the number of spare parts and makes the robot much easier to maintain.

High Return on Investment

- We control every aspect of our supply chain, allowing us to deliver the best value to our customers while retaining exceptional quality - from every component to the final assembly. The cost of initial investment is recovered on average within the first year.

High Repeatability

- Millisecond-level system response ensures high repeatability.
- Up to ±0.02mm repeatability.

Endless Customizability

- Nearly every aspect of our automation solutions are fully customizable. If you can' t find an out of box solution to fit your needs we can connect your team to our vast ecosystem of partners to help you customize a solution that is specific to your use case.

SERIES COLLABORATIVE ROBOT

The AUBO i-series cobots feature a payload capacity ranging from 3kg to 20kg. Compatible with a wide variety of end-effectors, they deliver consistent performance in terms of precision, speed, and stability. Designed to handle diverse applications across various industries, the i-series is built to better meet customer and market demands.

Product Advantages

01 **Next Gen Performance** The i-Series delivers 10–20% faster working speeds than the previous generation, with upgraded encoders that ensure repeatable, stable trajectories run after run — faster cycles without sacrificing precision.

02 **Versatile Integration** With an RS485 interface, 8-pin I/O, and a drag-teach button built into the flange, the i-Series offers greater flexibility than ever — supporting high-current power delivery and direct communication with diverse peripherals for fast, adaptable setup.

03 **Industrially Certified** Certified to multiple industry safety standards, with high-sensitivity collision detection that maximizes protection during human-robot collaboration.

04 **Modular and Easy to Replace Joints** An integrated modular design with standard replacement modules enables rapid servicing and convenient maintenance.

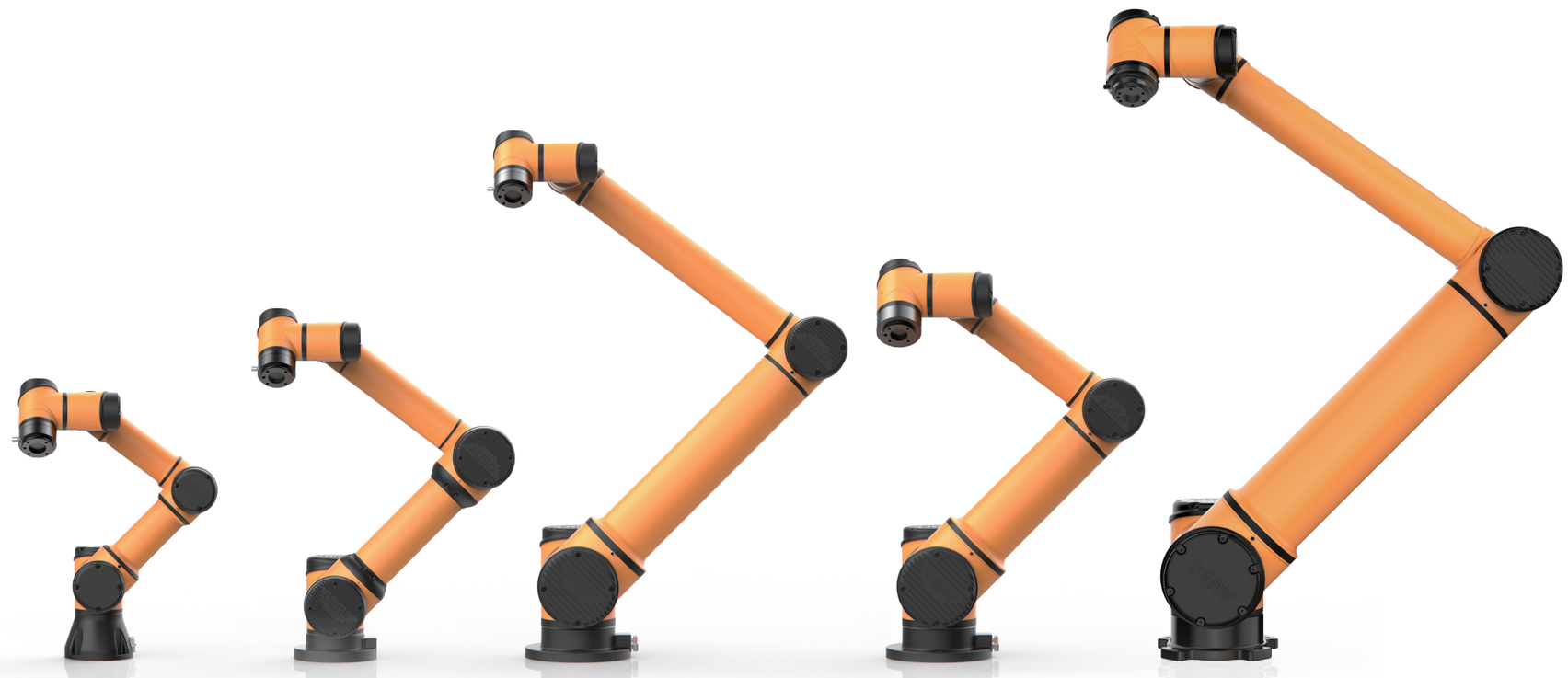

AUBO-i3
Payload：3kg
Weight：16.4kg
Repeatability：±0.02mm
Reach：625mm

AUBO-i5/i7
Payload：5kg/7kg
Weight：23.3kg/23.2kg
Repeatability：±0.02mm
Reach：886.5mm/786.5mm

AUBO-i10/i12
Payload：10kg/12kg
Weight：39.2kg/40.6kg
Repeatability：±0.03mm
Reach：1350mm/1250mm

AUBO-i16
Payload：16kg
Weight：38.9kg
Repeatability：±0.03mm
Reach：967.5mm

AUBO-i20
Payload：20kg
Weight：63.7kg
Repeatability：±0.05mm
Reach：1650mm

Application Fields

3C, automobile, hardware and household appliances, sanitary appliances for kitchens and bathrooms, medical health, scientific research and education, catering, new retail, chemical products for daily use, and logistics.

iS SERIES COLLABORATIVE ROBOT

The AUBO iS Series delivers high-performance collaborative robots with payloads ranging from 3 to 35kg, engineered for versatility across diverse industry applications. The iS Series excels in precision manufacturing, painting, and harsh or sensitive settings. With an upgraded IP67 rating and faster operating speeds, it works safely and efficiently even in the toughest conditions.

Product Advantages

01 Enhanced Performance Delivers high precision and speed with repeatability between ±0.02mm and 0.05mm. It supports a payload range of 3-35kg—including the pioneering 35kg model—and achieves tool speeds up to 4.2m/s.

02 All-New Design Features an optimized design with a payload-to-weight ratio up to 1:3.2, powered by advanced control algorithms. The rugged, fully enclosed architecture offers protection ratings up to IP68.

03 Modular, Easy-to-Replace Joints Featuring an integrated modular design, the iS Series comes with standard replacement modules for rapid servicing and convenient maintenance.

04 Compact, Lightweight Design The iS teach pendant weighs just 1kg, and the new control cabinet is 50% smaller than the previous generation. It also comes standard with a multifunctional tool end, suitable for a wide range of applications.

AUBO-iS3
Payload：3kg
Weight：16kg
Repeatability：±0.02mm
Reach：625mm

AUBO-iS7
Payload：7kg
Weight：21.5kg
Repeatability：±0.02mm
Reach：886.5mm

AUBO-iS10
Payload：12kg
Weight：36kg
Repeatability：±0.03mm
Reach：1300mm

AUBO-iS20/iS20L
Payload：20kg/20kg
Weight：64kg/72kg
Repeatability：±0.05mm/±0.05mm
Reach：1647mm/2000mm

AUBO-iS25
Payload：25kg
Weight：75.6kg
Repeatability：±0.05mm
Reach：1700mm

AUBO-iS35
Payload：35kg
Weight：172kg
Repeatability：±0.05mm
Reach：2100mm

Application Fields

The iS series cobots are widely applicable across various industry scenarios and are particularly suitable for precision manufacturing, painting, and special circumstances such as harsh, sensitive environments.

APPLICATION CASES

Industrial Field

3D Scanning and inspection

Engine Screwdriving

mobile phone camera detection

Appearance inspection of auto parts

Inspection of circuit boards

Instrument assembly

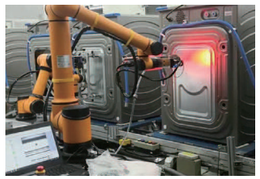
Assembly and screwing of white household appliances

Rubber assembly of auto electronic control systems

Intelligent assembly of auto parts

Welding

Gluing of vehicle windows

Palletizing

Vacuum cup stretching line

Frame coating

Machine Tending

Machine Tending

Non-Industrial Field

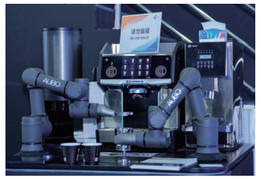
Coffee robot

Therapy robot

Remote Inspection Robot

Robot with digital twin technology

Robotic Blind Box Picking

Surgical Robot

Robotic Archive Management

Robotic Assembly Line

Robotic Beverage Station

Medical Inspection Robot

Fault Clearance Robot

Education & Training Platform

Fruit picking

Robotic High-voltage Switchgear Operation

Cleaning Robot

Follow us for more case studies

SUCCESS STORIES

Automobile

Windshield Gluing & Sealing

Windshield bonding demands a consistent bead at a consistent speed, held across a full shift. Manual application drifts. The obvious alternative — a traditional industrial robot — was not viable here: the safety fencing it requires would have consumed floor space this automaker needed for the inspection stations its people work at every day.

AUBO i5 cobots were installed directly into the existing line. No guarding, no layout changes, no separation from the workers around them. With ±0.5 mm repeatability and uniform application speed, the cobots hold bead geometry and glue volume to spec at a pace manual work cannot match, while operators continue inspecting finished product an arm's length away.

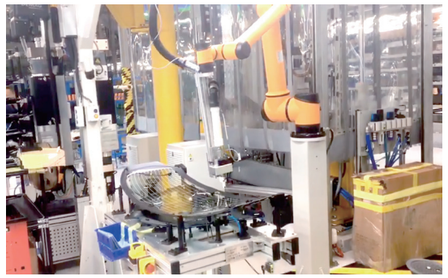

Continuous, Efficient Operation

Running since August 2019 at 16 hours a day with minimal downtime, the cells have completely replaced the manual gluing applicator. Longer hours, tighter tolerances, and no new safety risk introduced to the people on the line.

3C

Mobile Phone Camera Testing

Camera function testing at this handset manufacturer meant capturing the same subjects across indoor and outdoor environments, at a defined set of angles, across a range of product variants and states. Manual testing made those variables hard to control and harder to reproduce — and the work itself is long, continuous, and cumbersome by nature.

AUBO's mobile cobot solution pairs an AMR with a collaborative arm. The arm positions the device to each specified shooting angle inside the live-action studio; the mobile base moves it between test environments without an operator.

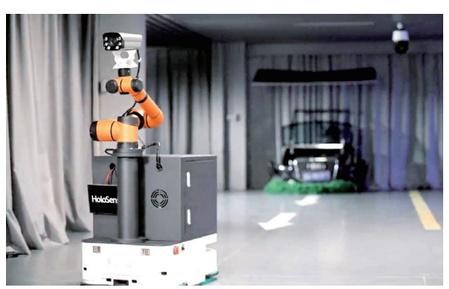

Stable and Efficient

Angles are held precisely rather than approximated, so results are directly comparable run to run. The cell operates 24 hours a day and captures substantially more comparative data in the same window than a manual test schedule allows.

Automobile

Engine Assembly Screwing, Fastening & Torquing

Engine assembly screwing is unforgiving. The fastening sequence is fixed, the screws fall into five categories spanning more than 100 sub-types, and each carries its own torque specification. Done by hand it is labor-intensive and quality drifts — and a torque value missed on one fastener is not visible until far downstream.

For this manufacturer's assembly line renovation, AUBO built a custom terminal screwing solution around the i5. A controllable screw gun end effector delivers precise torque to each specification, and a hand-eye vision system mounted directly to the arm identifies the screw type and sub-category visually before the gun engages. The i5's compact structure was what made the cell fit at all: the renovated workshop left little space and limited freedom of movement for a conventional solution.

Reduced Manual Labor, Increased Productivity

Since going into operation in April 2019: production efficiency on the line up 18%, overall product yield up 12%, personnel on the operation reduced by 50%, and labor cost down 30% year over year.

Machining

Multi-Machine Tending

This manufacturer produces precision machinery parts — industrial sewing machine components, power tool parts, automotive parts — in high mix and rising volume. Loading and unloading was manual, and between the variety of part types, the shop-floor noise, and the equipment layout, a single operator could realistically supervise two machines. Growth meant hiring, and hiring meant onboarding, training, and retention costs the business did not want to carry.

The requirement was a solution that worked inside the line as it already existed. The AUBO i10 met it: 1350 mm reach, a small footprint, and safe operation alongside people, which meant deployment into the original factory layout without relocating a single machine. Each cobot performs pick-and-place for two machines at once, working the narrow space between them.

Flexible Deployment

Because the i-Series is open for scripting, the customer wrote its own routines and shaped the workflow around its people rather than the reverse. One operator now tends six machines; two operators tend twelve — an impossibility with traditional industrial automation. Production scale tripled while the employee base stayed essentially unchanged.

SUCCESS STORIES

Healthcare

Massage Therapy Cobot

Traditional Chinese massage is a first-line treatment for cervical and lumbar care and for general pain management, occupying a role comparable to chiropractic care in North America. Demand for it consistently outruns the supply of trained practitioners. AUBO developed a massage therapy robot alongside a technology partner to deliver that treatment consistently, safely, and repeatably.

The end of the arm carries a force sensing module, a 3D vision sensor, thermal imaging, and a temperature-controlled massage head. Vision and thermal data map the patient's back and locate the treatment path; force sensing governs contact along it, so the cobot applies no more pressure than a practitioner's palm or elbow. Pressure profiles switch automatically during a session according to the patient's stated preference. The arm's own safety-rated stopping behavior sits underneath the force loop as a second layer.

Direct, sustained contact with a human body is the hardest thing to ask of a robot arm. That this one does it — under active force control, at controlled temperature, in a sanitary treatment setting — is the clearest demonstration of what human-centric collaborative robotics is actually for.

New-retail

Dual-Arm Hamburger Robot

AUBO's smart catering business is now operating commercially in partnership with restaurants across China, alongside stir-fry, soup rice, drink, frying, dessert, and meal-delivery robots. The hamburger cell is the flagship.

Two AUBO i3 cobots are mounted inversely so both can work the same build at the same time. The customer scans a QR code to order and the upper controller signals the pair to begin. One cobot draws bread from the material silo and feeds it to the heating furnace, then works with the sauce machine to dress the heated pieces. The other places vegetables and the patty and returns the tray. The two arms then combine the upper and lower halves, pack the finished burger, and place it on the conveyor to a pickup window the customer opens with the same QR code.

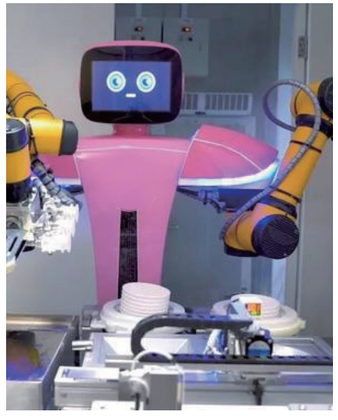

The achievement is not novelty. It is that a pair of collaborative arms can hold food-service takt time end to end, from order to pickup window, in a live customer-facing environment.

Mobile Cobots

Semiconductor Testing & Packaging

Semiconductor packaging and test workshops still run largely on manual handling, and manual handling introduces problems the process cannot absorb: particle contamination, vibration, mishandled parts, and dead time between discrete process steps. The workshop must also sustain its ISO cleanliness certification inside a complex layout with narrow aisles and a wide mix of equipment — and order demand is flexible enough that a fixed, simple production line was never an option.

The AUBO mobile cobot — a collaborative arm on an autonomous mobile base — handles material transfer between stations with no modification to the room. It navigates by hybrid positioning and laser natural navigation, holding ±5 mm indoor positioning repeatability, and a 360° dual safety LiDAR identifies and actively avoids obstacles so it can move quickly without becoming a hazard. At each station, 3D vision, force sensing, and the arm work together to locate and place cartridge holders and trays accurately.

24-hour operation and reduced labor cost

The cell runs continuously, closing the gaps between processes and converting what had been a manual information handoff into a tracked, visible production flow. Because both the cobot and the mobile base meet the workshop's safety and cleanliness standards, the installation preserved the certifications this manufacturer depends on.

Electric Power

Distribution Room Inspection

Electrical distribution rooms operate year-round, which makes equipment failure a question of when rather than whether. Inspection is therefore frequent, tedious, and entirely manual — largely because the low-voltage switchgear in these rooms cannot be operated remotely, so someone has to physically be standing in front of it.

In cooperation with China Unicom, AUBO deployed a mobile inspection cobot running on a dedicated 5G channel with processing at the edge, ensuring stable and secure operation. Big-data image recognition lets the robot distinguish equipment fault signals and error codes rather than simply photographing gauges, and it independently performs more than ten functions: equipment inspection, panel control, faulty part replacement, device reboot, and switch open/close among them. Like a technician writing up a shift, it stores viewable records of what it finds — closing the long-standing gap where alarm information could not be collected during a malfunction.

Unmanned Operation

The installation requires no personnel on site and is monitored entirely remotely. Because it uses AI and big data to adapt to what it observes rather than executing a pre-scripted route, the same platform transfers directly to computer rooms, plant floors, and any other environment where continuous unmanned inspection is the goal.

AUBO ECOSYSTEM

Anchored by our core cobot technology and bridged by a rich product ecosystem, AUBO provides seamless, plug-and-play one-stop solutions. By constructing a robust innovation network and collaborating across the entire supply chain, we are empowering partners to accelerate the growth of the collaborative robotics industry.

AUBO ECOSYSTEM PARTNERS

ALSONTECH, SENSOPART, HIKVISION, MECH MIND, ROBOTIQ, robot, SOLOMON, XYZ Robotics, SICK, PERCIPIO.XYZ, ATI Industrial Automation, KUNWEI 坤维科技, ROBOTOUS, WACOH, SCHUNK, ZIMMER group, DH ROBOTICS, SRT, GIMATIC, SMC, SMW AUTOBLOK, SRI-X, STANDARD ROBOTS, SCANTECH, Geek+, LANXIN ROBOTICS, LH-TC, YOUIBOT, JODELL ROBOTICS, EWELLIX, SwitchWeld, JASIC, SprutCAM, DEXFORCE, EUREKA ROBOTICS, SIEMENS, Rockwell Automation, SEER ROBOTICS, BASLER, WONSOR, KEYENCE, Transfer, Hypersen, Danikor, LANGAN, DEPRAG, SCAPE, piab, ……

(listed in no particular order)

Grow Your Business with the AUBO Ecosystem

Whether you are a system integrator, distributor, or technology consultant, we invite you to help us shape the future of collaborative automation. By joining the AUBO partner network, you gain more than just a supplier—you gain a strategic ally. We empower our partners with a comprehensive support framework, including qualified lead distribution, advanced technical training, and co-marketing resources. Let’s combine your expertise with our technology to unlock new markets and achieve shared success.

DEDICATED TO **NORTH AMERICA**

The smartest choice for adopting a collaborative automation workflow — headquartered in Detroit, Michigan, AUBO Robotics USA exclusively serves the North American market. Our U.S. headquarters houses our warehouse, service department, training center, and technical, customer, and sales support teams, giving you faster lead times since every Cobot Arm destined for the United States ships directly from Michigan. Plus, U.S.-based service and support means you can count on long-term support for your purchase.

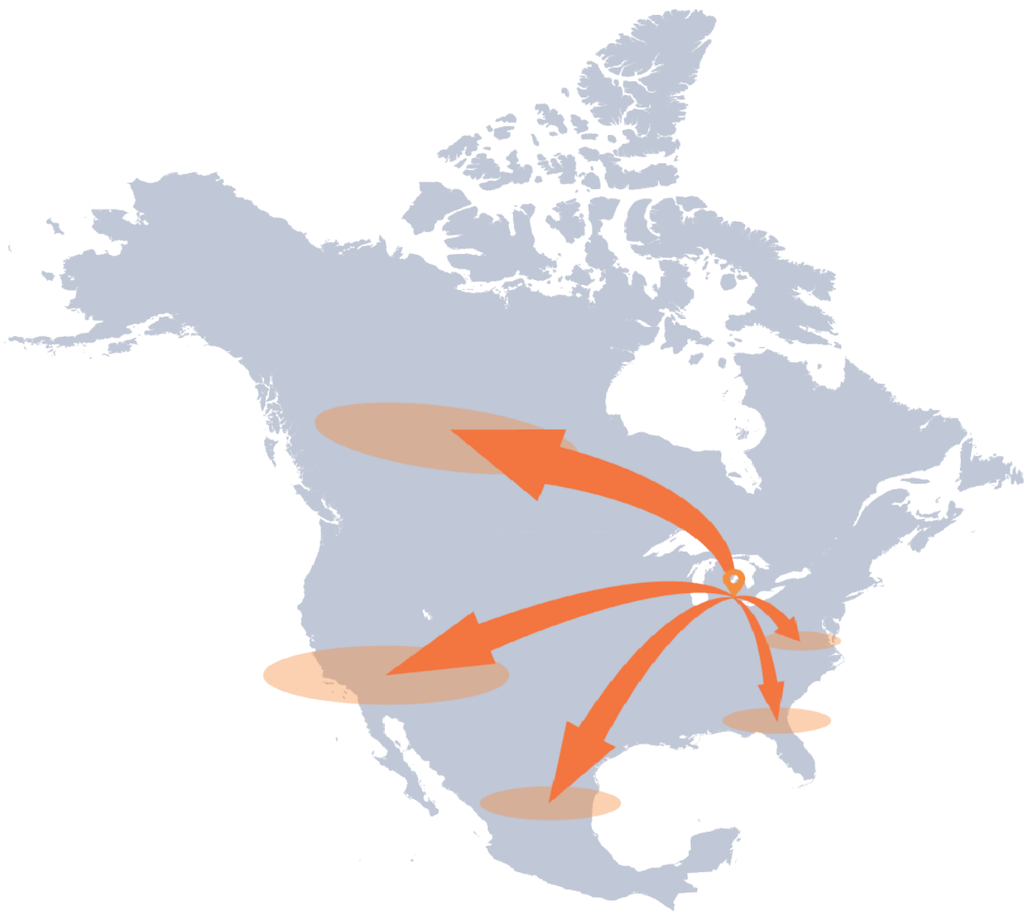

Dedicated U.S. Warehouse

Our U.S. warehouse stocks cobot parts, arms, and full assemblies for the entire i-Series line, ensuring fast lead times on every order.

Expedited Shipping

With parts and arms stocked stateside, we offer expedited shipping on all orders within the United States — no waiting on international freight.

Cobot Demonstrations

Want a hands-on look? We're confident you'll love what you see — schedule a demo at our headquarters or through our network of partners.

AUBO Vantage Training Academy

Our U.S. headquarters houses a full-service training facility and classroom for customers and our network of value-added partners.

U.S. Service Center

In the rare event of a component failure, we offer prompt, hassle-free RMA service — simply send the affected section to our U.S. headquarters and we'll repair or replace it right away. We also provide U.S.-based technical phone support on all AUBO products.

U.S. Based Sales Leadership

Our sales teams are U.S.-based, with leadership headquartered across the Midwest, West, and Southeast. AUBO USA's network of value-added partners includes distributors, integrators, and OEMs throughout North America.

	Model(i-Series Specification)	i3	i5	i7	i10	i12	i16	i20
Robot Arm	Degrees of Freedom	6	6	6	6	6	6	6
	Reach (mm)	625	886.5	786.5	1350	1250	967.5	1650
	Payload (kg)	3	5	7	10	12	16	20
	Weight (kg)	16.4	23.3	23.2	39.2	40.6	38.9	63.7
	Mounting Surface Diameter (mm)	Ø140	Ø170	Ø170	Ø218	Ø218	Ø218	Ø260
	Repeatability (mm)	±0.02	±0.02	±0.02	±0.03	±0.03	±0.03	±0.05
	Linear Velocity (m/s)	⩽2.5	⩽3.4	⩽3.0	⩽4.0	⩽3.8	⩽3.0	⩽2.6
	Average Power (W)	150	200	200	500	500	600	1000
	Peak Power (W)	1000	2000	2000	2000	2000	2000	3000
	Installation Orientation	Any ceiling, Floor, Wall	Any ceiling, Floor, Wall	Any ceiling, Floor, Wall	Any ceiling, Floor, Wall	Any ceiling, Floor, Wall	Any ceiling, Floor, Wall	Any ceiling, Floor, Wall
	IP Classification	IP54	IP54	IP54	IP54	IP54	IP54	IP54

Axis Movement	Working Range (°)	Maximum Speed (°/s)	Working Range (°)	Maximum Speed (°/s)	Working Range (°)	Maximum Speed (°/s)	Working Range (°)	Maximum Speed (°/s)	Working Range (°)	Maximum Speed (°/s)	Working Range (°)	Maximum Speed (°/s)	Working Range (°)	Maximum Speed (°/s)
joint 1	±360	237	±360	223	±360	237	±360	178	±360	178	±360	178	±360	110
joint 2	±360	237	±360	237	±360	237	±360	178	±360	178	±360	178	±360	110
joint 3	±156	237	±162	237	±158	237	±167	223	±166	267	±161	267	±168	178
joint 4	±360	237	±360	237	±360	237	±360	237	±360	237	±360	237	±360	178
joint 5	±360	237	±360	237	±360	237	±360	237	±360	237	±360	237	±360	178
joint 6	±360	237	±360	237	±360	237	±360	237	±360	237	±360	237	±360	178

*Each joint possesses a ±360 degree capability, but due to limitations in application scenarios, this may not be achieved for all joints. Please take note during actual use.

*The temperature range of the working environment is 0-50°C, and the humidity level is 90% relative humidity (non-condensing).

	Category	i-Series Control Box
Control Box	Model	AUBO-CB-iS
	Dimensions	400mm * 160mm * 320mm
	Weight	12.5kg
	IP Classification	IP43
	Power Supply	115/230 VAC, 50/60 Hz
	Cabling Connecting the Robot	5m (customizable, up to 8m)
	Cabling Connecting the Teach Pendant	4m
	Cabling Connecting the Power	5m
	Communication	Ethernet, ModBus-RTU/TPU, Profinet, Ethernet/IP (optional)
	Interface	SDK (C/C++/C#/Lua/Python/Javascript; Window + Linux) Supports ROS/ROS 2, AP

Teach Pendant	
Model	AUBO-TP-IS
Dimensions	254mm * 213.1mm * 40.8mm
Weight	1.0kg
IP Classification	IP54
Color	Orange + Black

Control Box I/O & Tool I/O		Control Box (AUBO-CB-IS)	Tool End
I/O Port	Digital In	16 (General) + 8 (Safety)	4 (Configurable)
	Digital Out	16 (General) + 8 (Safety)	4 (Configurable)
	Analog In	2	2
	Analog Out	2	-
	RS485	2	1
I/O Power	Output Voltage	24V	0V/12V/24V
	Output Current	3A max	2A(3A max)

AUBO-CB-iS

Technical Specifications

	Model(iS-Series Specification)	iS3	iS7	iS10	iS20	iS20L	iS25	iS35
Robot Arm	Degrees of Freedom	6	6	6	6	6	6	6
	Reach (mm)	625	886.5	1300	1647	2000	1700	2100
	Payload (kg)	3	7	12	20	20	25	35
	Weight (kg)	16	21.5	36	64	72	75.6	172
	Mounting Surface Diameter (mm)	Ø140	Ø170	Ø218	Ø260	Ø282	Ø282	Ø423
	Repeatability (mm)	±0.02	±0.02	±0.03	±0.05	±0.05	±0.05	±0.05
	Linear Velocity (m/s)	⩽2.5	⩽3.6	⩽4.0	⩽3.5	⩽3.5	⩽3	⩽4
	Average Power (W)	150	200	500	1000	1000	1000	2000 (Approx.)
	Peak Power (W)	1000	2000	2000	3000	3000	3000	6000 (Approx.)
	Installation Orientation	Any ceiling, Floor, Wall	Any ceiling, Floor, Wall	Any ceiling, Floor, Wall	Any ceiling, Floor, Wall	Any ceiling, Floor, Wall	Any ceiling, Floor, Wall	Any ceiling, Floor, Wall
	IP Classification	IP67	IP67	IP67	IP54 (Up to IP67)	IP54 (Up to IP67)	IP54 (Up to IP67)	IP54 (Up to IP67)

Axis Movement	Working Range (°)	Maximum Speed (°/s)	Working Range (°)	Maximum Speed (°/s)	Working Range (°)	Maximum Speed (°/s)	Working Range (°)	Maximum Speed (°/s)	Working Range (°)	Maximum Speed (°/s)	Working Range (°)	Maximum Speed (°/s)	Working Range (°)	Maximum Speed (°/s)
joint 1	±360	237	±360	237	±360	178	±360	123	±360	104	±360	104	±360	113
joint 2	±360	237	±360	237	±360	178	±360	123	±360	104	±360	104	±360	113
joint 3	±156	237	±162	237	±167	237	±168	178	±170	178	±166	178	±168	123
joint 4	±360	237	±360	296	±360	296	±360	296	±360	296	±360	296	±360	237
joint 5	±360	237	±360	296	±360	296	±360	296	±360	296	±360	296	±360	237
joint 6	±360	237	±360	296	±360	296	±360	296	±360	296	±360	296	±360	237

*Each joint possesses a ±360 degree capability, but due to limitations in application scenarios, this may not be achieved for all joints. Please take note during actual use.

*The temperature range of the working environment is 0-50°C, and the humidity level is 90% relative humidity (non-condensing).

i3 Dimension Drawings

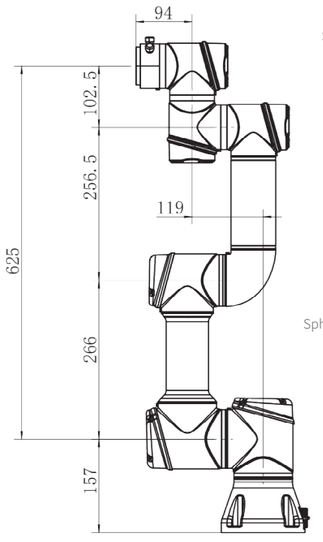

AUBO-i3 Dimensions

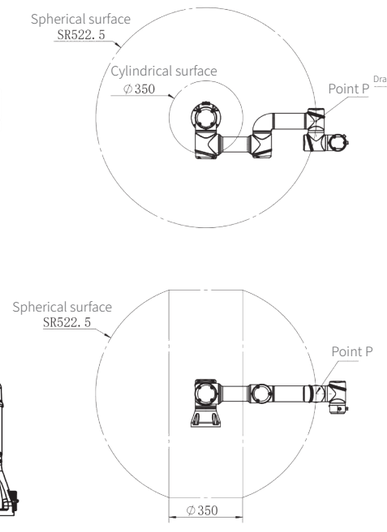

AUBO-i3 Moving Range of Point P

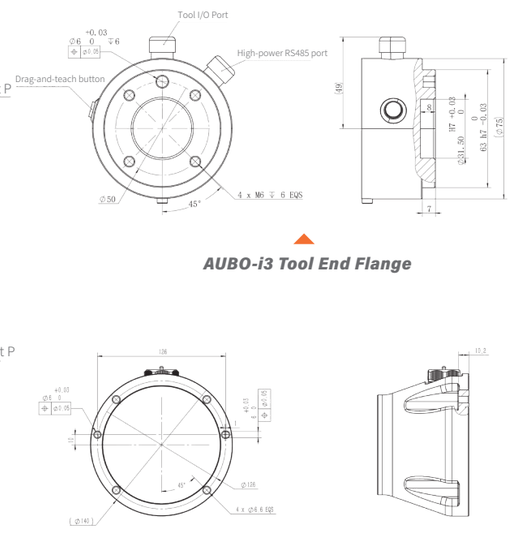

AUBO-i3 Top View of Base

AUBO-i3 Tool End Flange

i5

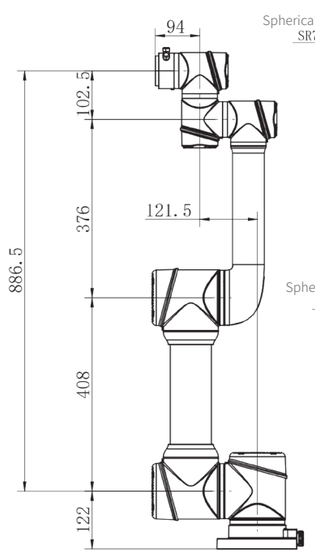

AUBO-i5 Dimensions

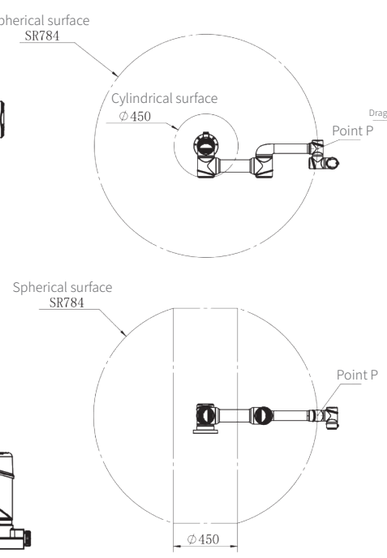

AUBO-i5 Moving Range of Point P

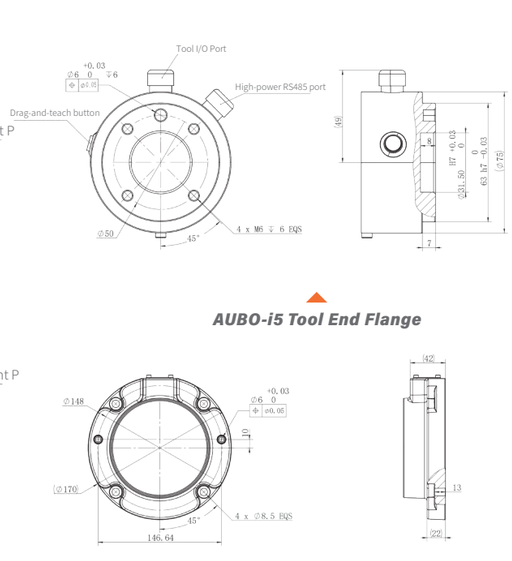

AUBO-i5 Top View of Base

AUBO-i5 Tool End Flange

Dimension Drawings i7

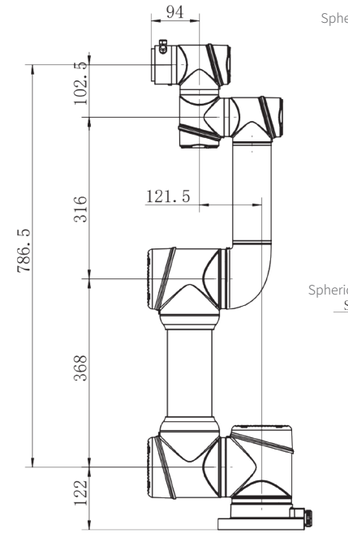

AUBO-i7 Dimensions

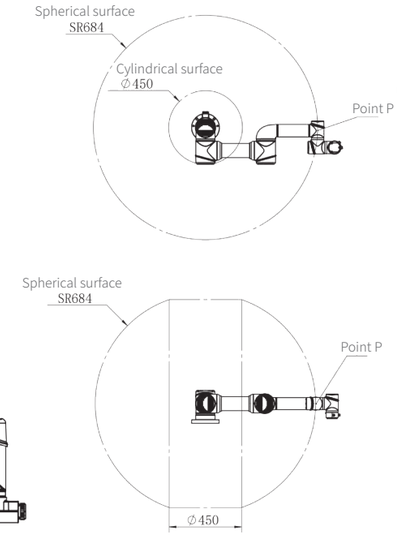

AUBO-i7 Moving Range of Point P

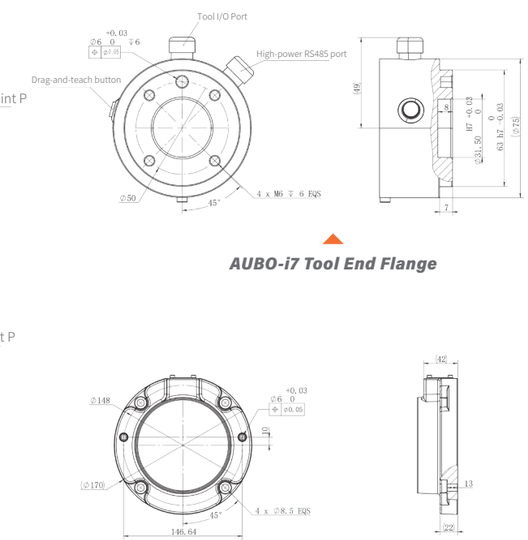

AUBO-i7 Top View of Base

AUBO-i7 Tool End Flange

Dimension Drawings i10

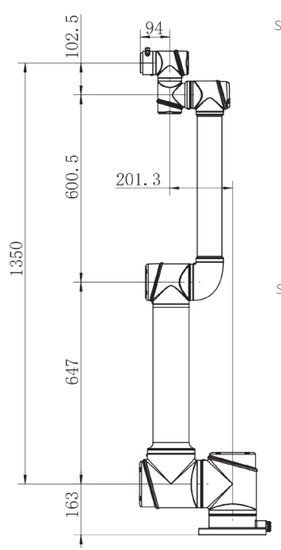

AUBO-i10 Dimensions

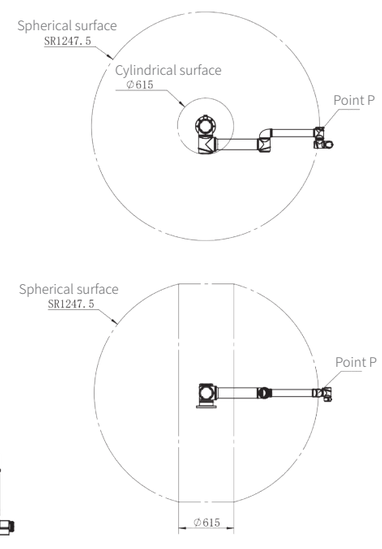

AUBO-i10 Moving Range of Point P

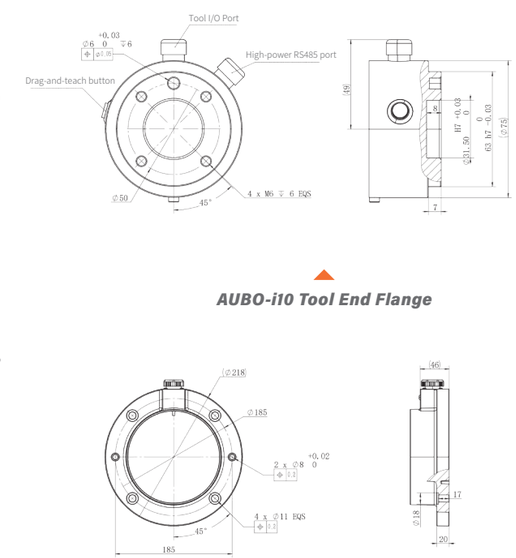

AUBO-i10 Top View of Base

AUBO-i10 Tool End Flange

i12 Dimension Drawings

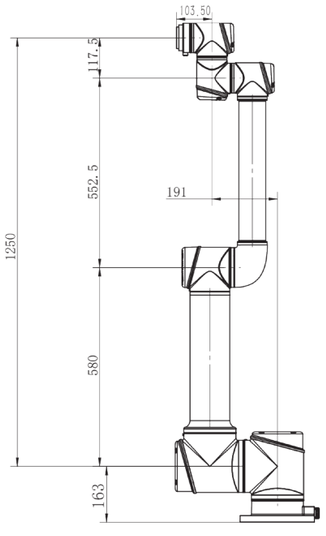

AUBO-i12 Dimensions

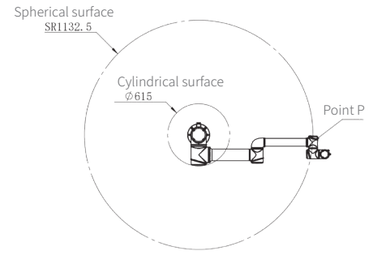

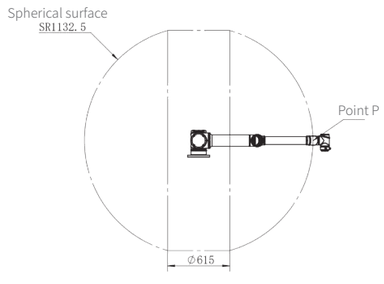

AUBO-i12 Moving Range of Point P

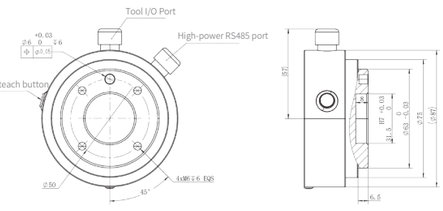

AUBO-i12 Tool End Flange

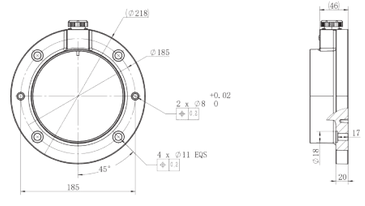

AUBO-i12 Top View of Base

Dimension Drawings i20

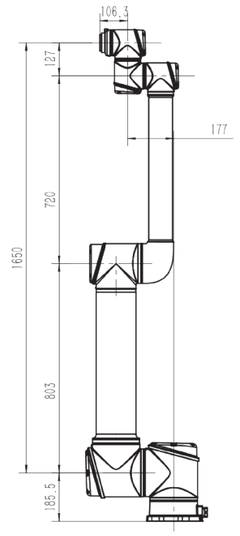

AUBO-i20 Dimensions

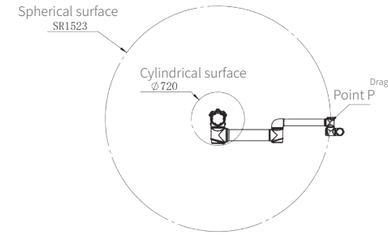

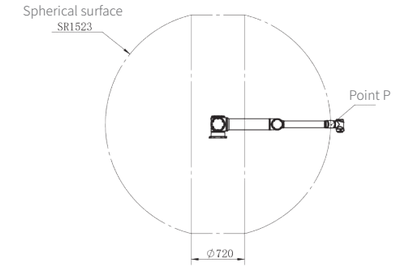

AUBO-i20 Moving Range of Point P

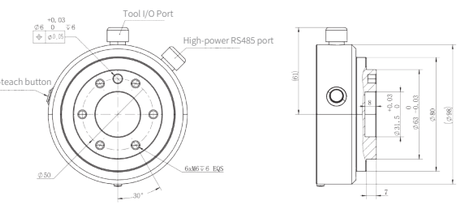

AUBO-i20 Tool End Flange

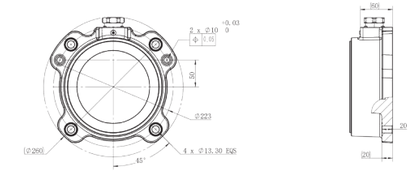

AUBO-i20 Top View of Base

i16

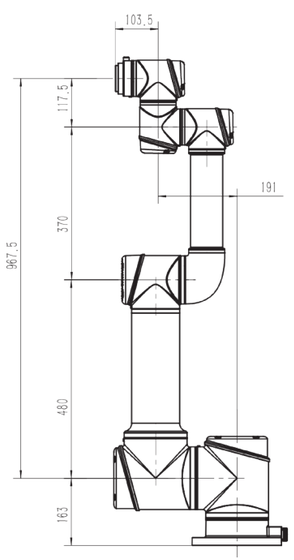

AUBO-i16 Dimensions

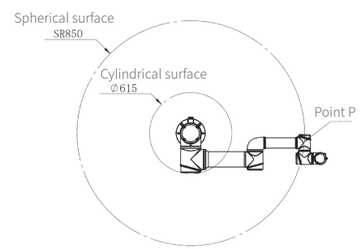

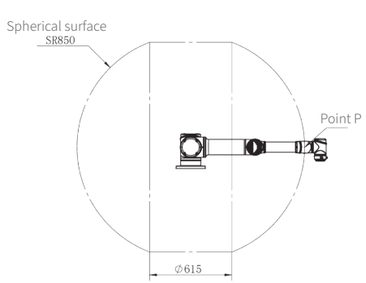

AUBO-i16 Moving Range of Point P

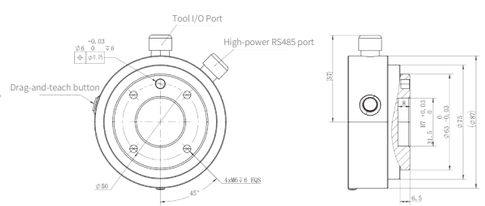

AUBO-i16 Tool End Flange

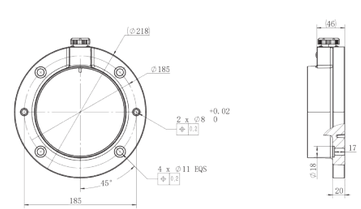

AUBO-i16 Top View of Base

iS3

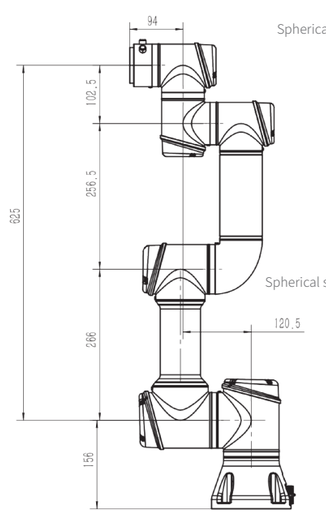

AUBO-iS3 Dimensions

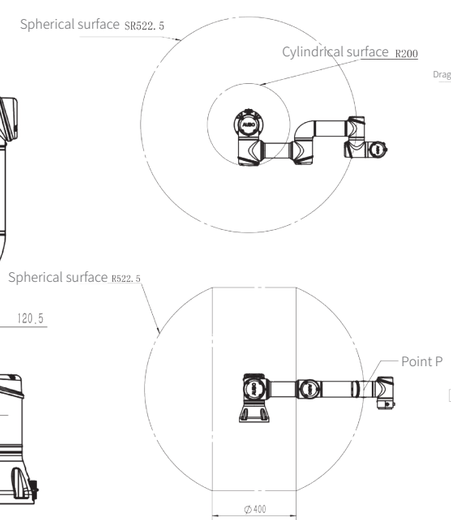

AUBO-iS3 Moving Range of Point P

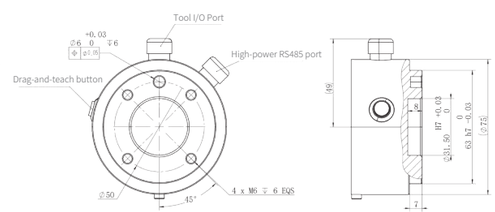

AUBO-iS3 Tool End Flange

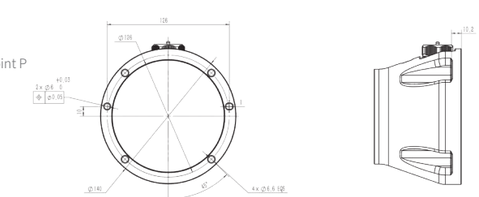

AUBO-iS3 Top View of Base

iS7 Dimension Drawings

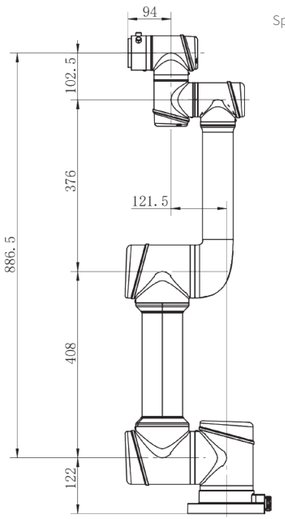

AUBO-iS7 Dimensions

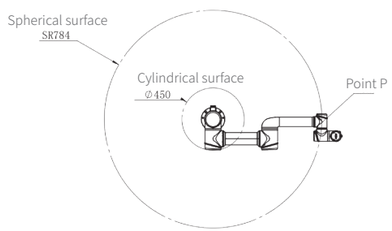

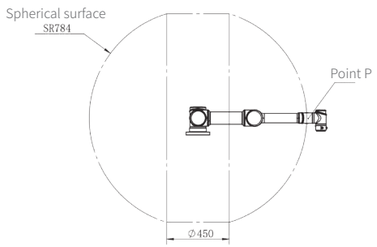

AUBO-iS7 Moving Range of Point P

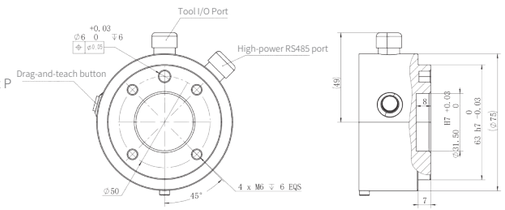

AUBO-iS7 Tool End Flange

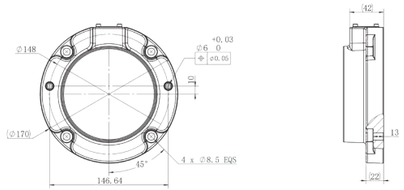

AUBO-iS7 Top View of Base

Dimension Drawings iS20

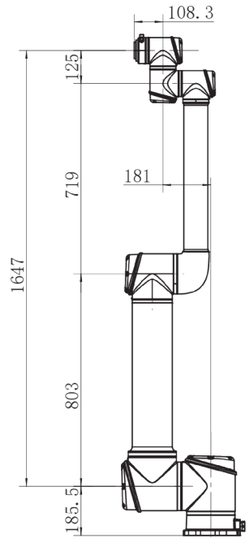

AUBO-iS20 Dimensions

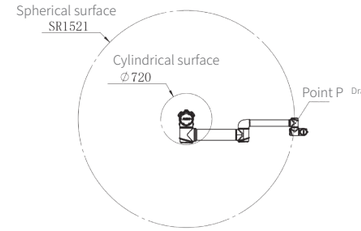

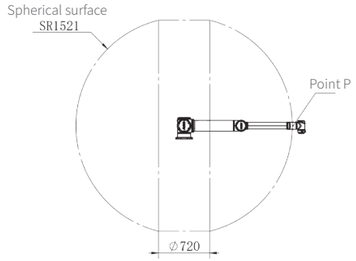

AUBO-iS20 Moving Range of Point P

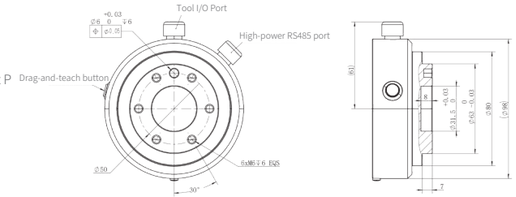

AUBO-iS20 Tool End Flange

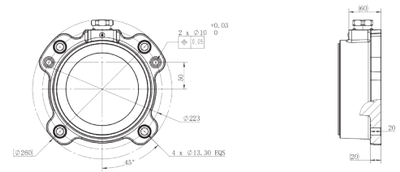

AUBO-iS20 Top View of Base

iS10

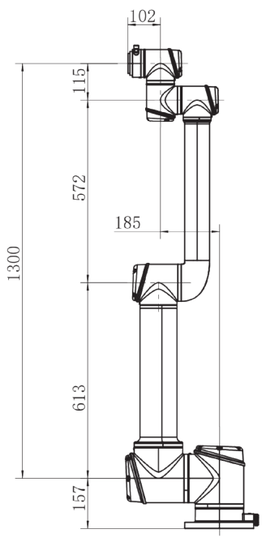

AUBO-iS10 Dimensions

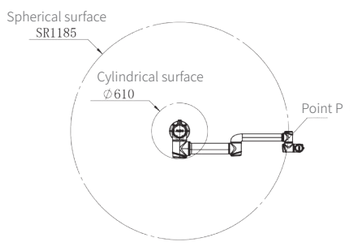

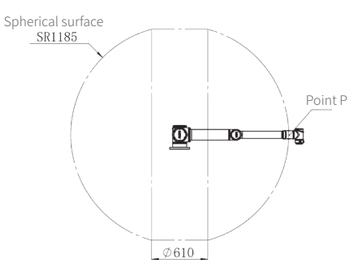

AUBO-iS10 Moving Range of Point P

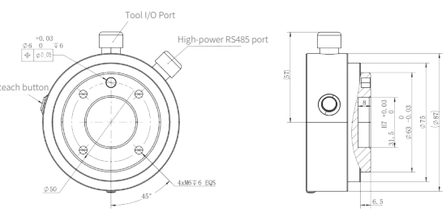

AUBO-iS10 Tool End Flange

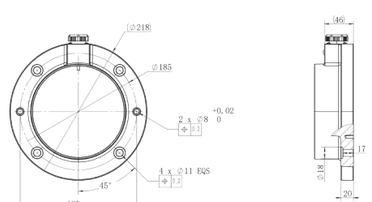

AUBO-iS10 Top View of Base

iS20L Dimension Drawings

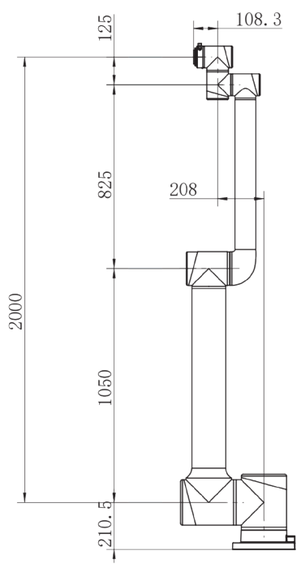

AUBO-iS20L Dimensions

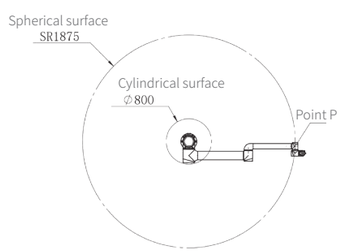

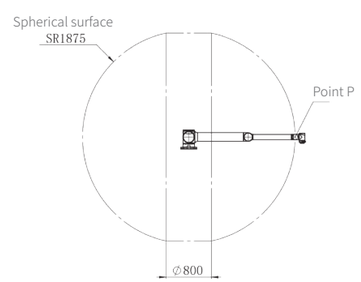

AUBO-iS20L Moving Range of Point P

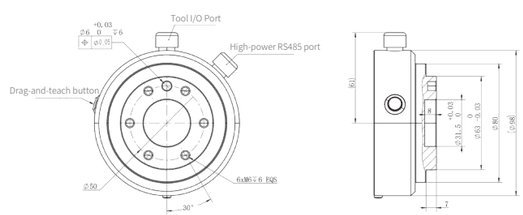

AUBO-iS20L Tool End Flange

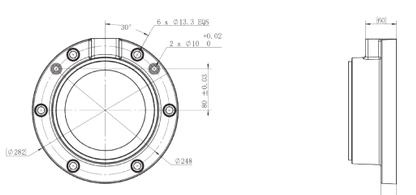

AUBO-iS20L Top View of Base

iS25

Dimension Drawings

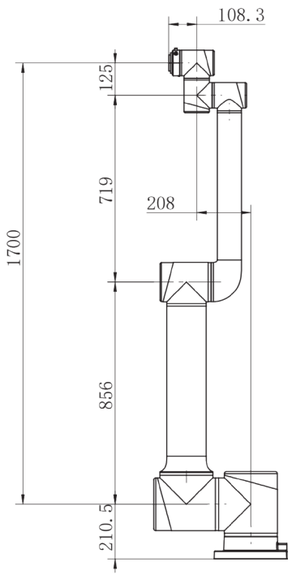

AUBO-iS25 Dimensions

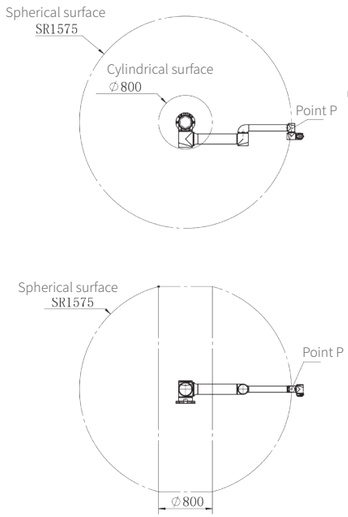

AUBO-iS25 Moving Range of Point P

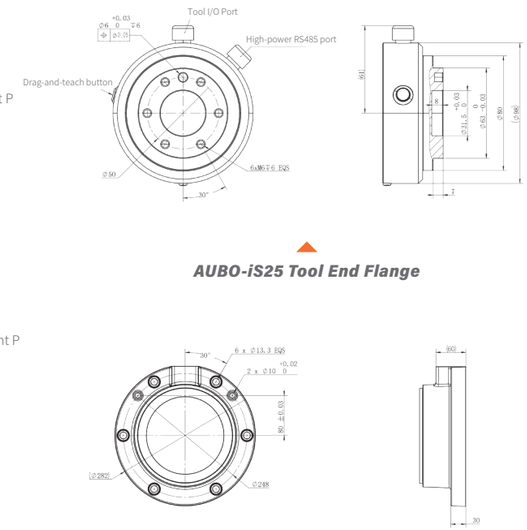

AUBO-iS25 Tool End Flange

AUBO-iS25 Top View of Base

iS35

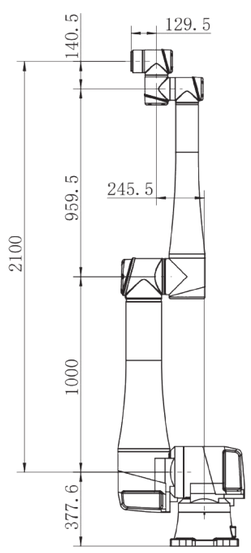

AUBO-iS35 Dimensions

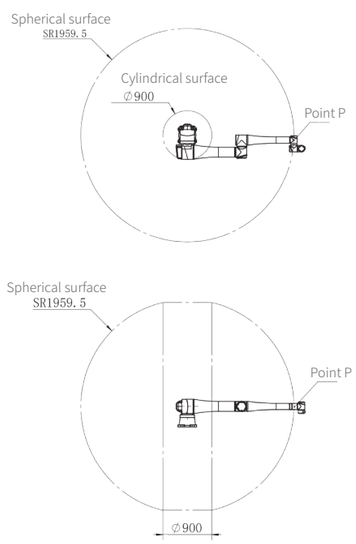

AUBO-iS35 Moving Range of Point P

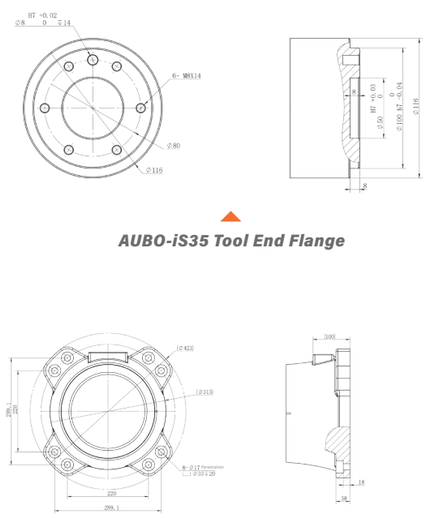

AUBO-iS35 Tool End Flange

AUBO-iS35 Top View of Base

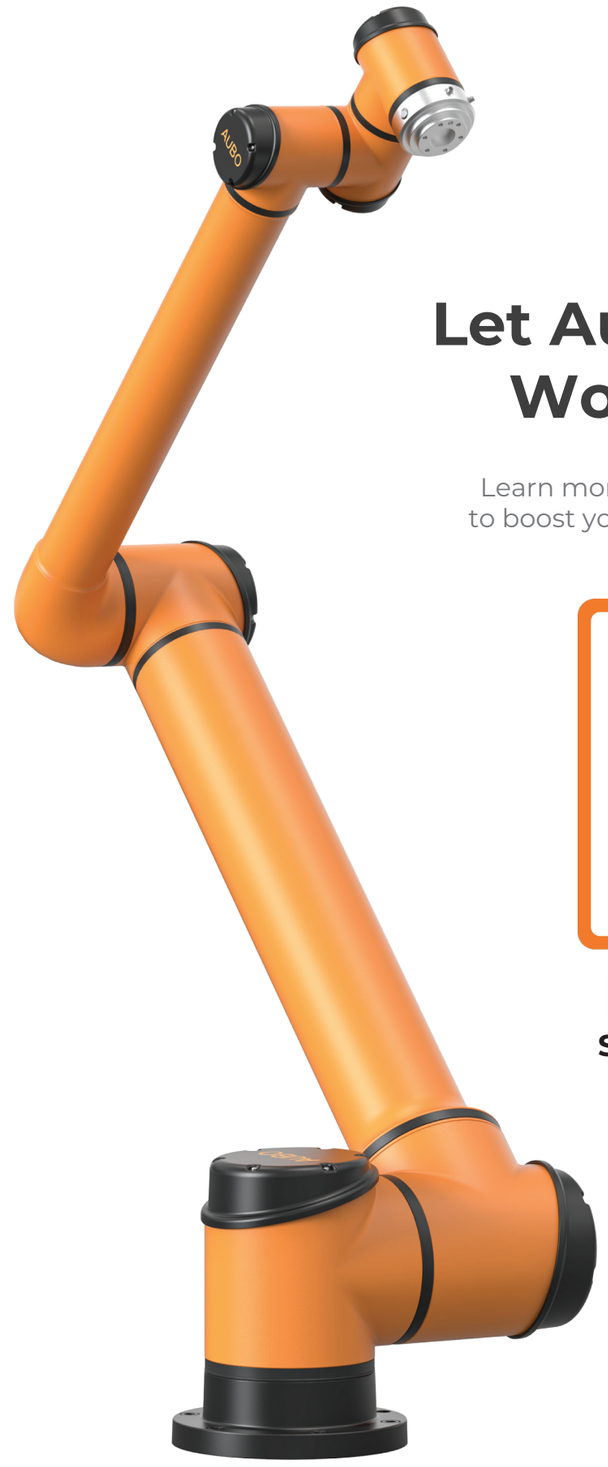

Let Automation Work for You

Learn more at www.aubo-usa.com
to boost your efficiency and growth

SCAN TO CONNECT